CHAPTER 157. ESTABLISHED SOUND LEVELS

Subchap.		Sec.
A.	GENERAL PROVISIONS	157.1
B.	NOISE LIMITS	157.11
C.	ADMINISTRATIVE PROVISIONS	157.21
D.	INSTRUMENTATION	157.31
E.	MEASUREMENT OF NOISE EMISSION HIGHWAY OPERATIONS	157.41
F.	CORRECTION FACTORS	157.51

Authority

The provisions of this Chapter 157 issued under the Vehicle Code, 75 Pa.C.S. §§ 4521 and 6103, unless otherwise noted.

Source

The provisions of this Chapter 157 adopted August 26, 1977, effective August 27, 1977, 7 Pa.B. 2428, unless otherwise noted.

Cross References

This chapter cited in 67 Pa. Code § 175.75 (relating to exhaust systems); 67 Pa. Code § 175.105 (relating to exhaust systems); 67 Pa. Code § 175.152 (relating to exhaust systems); and 67 Pa. Code § 175.181 (relating to exhaust systems).

Subchapter A. GENERAL PROVISIONS

Sec.
157.1. Purpose.
157.2. Definitions.

§ 157.1. Purpose.

(a) *Purpose.* This chapter prescribes procedures for inspection, surveillance and measurement of motor vehicles operated on a highway to determine whether those vehicles are constructed, equipped, maintained and operated to conform with the established sound levels in § 157.11 (relating to vehicular noise limits).

(b) *Exceptions.* This chapter does not apply to:

(1) Fire equipment.

(2) Racing vehicles which are operated in an organized racing or competitive event conducted under a permit issued by local authorities.

§ 157.2. Definitions.

The following words and terms, when used in this chapter, have the following meanings, unless the context clearly indicates otherwise:

Ground cover—Any of various low, dense-growing plants, such as ivy, myrtle, low weeds or brush.

Hard test site—A test site having the ground surface covered with concrete, asphalt, packed dirt, gravel or similar reflective material for more than 1/2 the distance between the microphone target point and the microphone location point.

Microphone line—An unmarked reference line running parallel to the vehicle path and passing through the microphone.

Microphone point—The unmarked location on the center of the lane of travel that is closest to the microphone.

Relatively flat—A noise measurement site which does not contain significant concave curvatures or slope reversals that may result in the focusing of sound waves toward the microphone location point is relatively flat.

Soft test site—A test site having the ground surface covered with grass, other ground cover or similar absorptive material for 1/2 or more of the distance between the microphone target point and the microphone location point.

Traffic railing—A longitudinal highway traffic barrier system installed along the side or median of a highway. A traffic railing shall have at least 35% of its vertical height, from the ground surface to the top of the railing, open to free space in order to qualify as an acceptable object within a noise measurement test site. Posts or other discrete supports shall be ignored when ascertaining open free space.

Vehicle reference point—The location on the vehicle used to determine when the vehicle is at any of the points on the vehicle path. The primary vehicle reference point shall be the front of the vehicle. For vehicles with a gross vehicle rating of 6,000 pounds or more, where the distance from the front of the vehicle to the exhaust outlet is more than 16 feet, the secondary vehicle reference point shall be the exhaust outlet.

Cross References

This section cited in 67 Pa. Code § 157.41 (relating to site characteristics).

Subchapter B. NOISE LIMITS

Sec.
157.11. Vehicular noise limits.
157.12. Measurement tolerances.

§ 157.11. Vehicular noise limits.

(a) *Prohibition.* No person shall operate either a motor vehicle or combination of vehicles of a type subject to registration at any time or under any condition of grade, load, acceleration or deceleration in such a manner as to exceed the following noise limit for the category of motor vehicle within the speed limits specified in Table 1.

 Copyright © 1998 Commonwealth of Pennsylvania

TABLE 1
Maximum Permissible Sound Level Readings (decibel (A))
Highway operations test

	soft site		*hard site*	
	35 mph or less	*Above 35 mph*	*35 mph or less*	*Above 35 mph*
(1) Any motor vehicle with a manufacturers gross vehicle weight rating of 6,000 pounds or more and any combination of vehicles towed by such motor vehicle.	86	90	88	92
(2) Any motorcycle other than a motor-driven cycle.	82	86	84	88
3) Any other motor vehicle and any combination of vehicles towed by such motor vehicles.	76	82	78	84

(b) *Measurement distance.* The noise limits established by this section shall be based on a distance of 50 feet from the center lane of travel within the speed limit specified in this section. Measurements at distances closer than 50 feet from the center of the lane of travel may be made. In such a case, the measuring device shall be so calibrated as to provide for measurements equivalent to the noise limit established by this section measured at 50 feet.

(c) *Trucks.* A truck, truck tractor, or bus that is not equipped with an identification plate or marking bearing the name and gross vehicle weight rating of the manufacturer shall be considered as having a gross vehicle weight rating of 6,000 pounds or more if the unladen weight is more than 5,000 pounds.

(d) *Exemptions.* This section does not apply to any of the following:

(1) The sound generated by a warning device, such as a horn or siren, installed in a motor vehicle, unless such device is intentionally sounded in order to preclude an otherwise valid noise emission measurement.

(2) An emergency vehicle, such as a fire department vehicle, police vehicle, ambulance, blood-delivery vehicle, armed forces emergency vehicle, one private vehicle of fire or police chief or assistant chief or ambulance corps commander or assistant commander or of a river rescue commander, or other vehicles designated by the State Police as emergency vehicles, when responding to an emergency call.

(3) A snow plow in operation.

(4) The sound generated by special mobile equipment which is normally operated only when the motor vehicle on which it is installed is stopped or is operating at a speed of 5 miles per hour or less, unless such device is intentionally operated at speeds greater than 5 miles per hour in order to preclude an otherwise valid noise measurement.

Cross References

This section cited in 67 Pa. Code § 157.1 (relating to purpose).

§ 157.12. Measurement tolerances.

(a) *Factors.* Measurement tolerances shall be allowed to take into account the effects of the following factors:

(1) The consensus standard practice of reporting field sound level measurements to the nearest whole decibel.

(2) Variations resulting from commercial instrument tolerances.

(3) Variations resulting from the topography of the noise measurement site.

(4) Variations resulting from atmospheric conditions such as wind, ambient temperature, and atmospheric pressure.

(5) Variations resulting from reflected sound from small objects allowed within the test site.

(6) The interpretation of the above cited factors by enforcement personnel.

(b) *Limitations.* Measurement tolerances shall not exceed two decibels for a given measurement.

Subchapter C. ADMINISTRATIVE PROVISIONS

Sec.
157.21. Inspection and examination of motor vehicles.

§ 157.21. Inspection and examination of motor vehicles.

(a) *Police authorization.* Any police officer shall be authorized to inspect, examine and test a motor vehicle in accordance with the procedures specified in this chapter.

(b) *Duty to submit.* A driver or owner shall, at any time, submit a motor vehicle for inspection, examination, and testing for the purpose of ascertaining whether the motor vehicle and equipment installed on it conforms with the sound levels specified in Table 1.

(c) *Training.* Police officers selected to measure sound level of vehicles operated on highways shall have received training in the techniques of sound measurement and the operation of sound measuring instruments.

(d) *Method.* When making direct readings of the meter, the police officer shall be positioned in relation to the microphone in accordance with the instruc-

 Copyright © 1998 Commonwealth of Pennsylvania

tions for the instrument. When the instrument manual is vague or does not include adequate information, a specific recommendation shall be obtained from the manufacturer.

Subchapter D. INSTRUMENTATION

Sec.
157.31. Types of measurement systems which may be used.
157.32. Calibration of measurement systems.
157.33. Windscreens.

§ 157.31. Types of measurement systems which may be used.

The sound level measurement system shall meet or exceed the requirements of American National Standard Specifications for Sound Level Meters, ANSI S1.4—1971, approved April 27, 1971, issued by the American National Standards Institute, throughout the applicable frequency range for either:

(1) A Type 1 sound level meter.

(2) A Type 2 sound level meter.

(3) A Type S sound level meter which has the following:

(i) A-weighting frequence response.

(ii) Fast dynamic characteristics of its indicating instrument.

(iii) A relative response level tolerance consistent with those of either a Type 1 or Type 2 sound level meter, as specified in Section 3.2 of ANSI S1.4—1971.

Cross References

This section cited in 67 Pa. Code § 157.42 (relating to ambient conditions); and 67 Pa. Code § 157.43 (relating to location and operation of sound level measurement system).

§ 157.32. Calibration of measurement systems.

(a) *Calibration.* Requirements for calibration shall be as follows:

(1) The sound level measurement system shall be calibrated and appropriately adjusted at one or more frequencies in the range from 250 to 1,000 hertz at the beginning of each series of measurements and at intervals of 5—15 minutes thereafter until it has been established that the sound level measurement system has not drifted from its calibrated level. Once this fact has been established, calibrations may be made at intervals of once every hour. A significant drift shall be considered to have occurred if a 0.3 decibel or more excursion is noted from the systems predetermined reference calibration level. In the case of systems using displays with whole decibel increments, the operator may usually judge when the 0.3 decibel drift has been met or exceeded.

(2) The sound level measurement system shall be checked periodically by its manufacturer, a representative of its manufacturer, or a person of equivalent special competence to verify that its accuracy meets the design criteria of the manufacturer.

(b) *Acoustical calibrator.* An acoustical calibrator of the microphone coupler type design for the sound level measurement system in use shall be used to calibrate the sound level measurement system in accordance with subsection (a) of this section. The calibrator shall meet or exceed the accuracy requirements specified in section 5.4.1 of the American National Standards Institute Standard Methods for Measurements of Sound Pressure Levels, ANSI § 1.13—1971, for calibrators for field type measurements.

§ 157.33. Windscreens.

A properly installed windscreen, of the type recommended by the manufacturer of the sound level measurement system, shall be used during the time that noise emission measurements are being taken.

Subchapter E. MEASUREMENT OF NOISE EMISSION HIGHWAY OPERATIONS

Sec.
157.41. Site characteristics.
157.42. Ambient conditions.
157.43. Location and operation of sound level measurement system.
157.44. Measurement procedures.

§ 157.41. Site characteristics.

(a) *Distances.* Measurement shall be made at a test site which is adjacent to, and includes a portion of, a traveled lane of a public highway. A microphone target point shall be established on the centerline of the traveled lane of the highway, and a microphone location point shall be established on the ground surface not less than 26 feet (7.8 meters) or more than 118 feet (35.4 meters) from the microphone target point and on a line that is perpendicular to the centerline of the traveled lane of the highway and that passes through the microphone target point. In the case of a standard test site, the microphone location point shall be 50 feet (15.2 meters) from the microphone target point. Within the test site shall be a triangular measurement area. A plan view diagram of a standard test site, having an open site within a 50 foot (15.2 meters) radius of both the microphone target point and the microphone location point, is shown in Figure 1 in Appendix A. Measurements may be made at a test site having smaller or greater dimensions in accordance with the provisions of Subchapter F (relating to correction factors).

 Copyright © 1998 Commonwealth of Pennsylvania

(b) *Sound reflective objects in triangular measurement areas.* The test site shall be an open site, essentially free of large sound-reflecting objects. However, the following objects may be within the test site, including the triangular measurement area:

(1) Small cylindrical objects such as fire hydrants or telephone or utility poles.

(2) Rural mailboxes.

(3) Traffic railings of any type of construction except solid concrete barriers. See § 157.2 (relating to definitions).

(4) One or more curbs having a vertical height of one foot (0.3 meter) or less.

(c) *Sound reflective objects outside triangular measurement area.* The following objects may be within the test site if they are outside of the triangular measurement area of the site:

(1) Any vertical surface, such as billboard, regardless of size, having a lower edge more than 15 feet (4.6 meters) higher than the surface of the traveled lane of the highway.

(2) Any uniformly smooth sloping surface slanting away from the highway, such as a rise in grade alongside the highway, with a slope that is less than 45° above the horizontal.

(3) Any surface slanting away from the highway that is 45° or more and not more than 90° above the horizontal, if all points on the surface are more than 15 feet (4.6 meters) above the surface of the traveled lane of the highway.

(d) *Surface.* The surface of the ground within the measurement area shall be relatively flat. The site shall be a ''soft'' test site. However, if the site is determined to be ''hard,'' the correction factor shall be applied to the measurement.

(e) *Pavement.* The traveled lane of the highway within the test site shall be dry, paved with relatively smooth concrete or asphalt, and substantially free of:

(1) holes or other defects which would cause a motor vehicle to emit irregular tire, body, or chassis impact noise; and

(2) loose material, such as gravel or sand.

(f) *Tunnel or underpass.* The traveled lane of the highway on which the microphone target point is situated shall not pass through a tunnel or underpass located within 200 feet (61 meters) of that point.

§ 157.42. Ambient conditions.

(a) *Sound.* Requirements concerning ambient sound conditions shall be as follows:

(1) The ambient A-weighted sound level at the microphone location point shall be measured, in the absence of motor vehicle noise, emanating from within the clear noise zone, with fast meter response using a sound level measurement system that conforms to the provisions of § 157.31 (relating to types of measurement systems which may be used).

(2) The measured ambient level shall be ten decibels (A) or more below that level specified in Table 1, which corresponds to the maximum permissible sound level reading which is applicable at the test site at the time of testing.

(b) *Wind.* The wind velocity at the test shall be measured at the beginning of each series of noise measurements and at intervals of 5—15 minutes thereafter until it has been established that the wind velocity is essentially constant. Once this fact has been established, wind velocity measurements may be made at intervals of once every hour. Noise measurements shall only be made if the measured wind velocity is 12 miles per hour (19.3 kilometers per hour) or less. Gust wind measurements of up to 20 miles per hour (33.2 kilometers per hour) shall be allowed.

(c) *Precipitation.* Measurements shall be prohibited under any condition of precipitation, however, measurements may be made with snow on the ground. The ground surface within the measurement area shall be free of standing water.

§ 157.43. Location and operation of sound level measurement system.

(a) *Microphone height.* The microphone of a sound level measurement system that conforms to the provisions of § 157.31 (relating to types of measurement systems which may be used) shall be located at a height of not less than 2 feet (0.6 meters) nor more than 6 feet (1.8 meters) above the plane of the roadway surface and not less than 3 1/2 feet (1.1 meters) and not more than 4 1/2 feet (1.4 meters) above the surface on which the microphone stands. The preferred microphone height or flat terrain is four feet (1.2 meters).

(b) *Monitor orientation.* Requirements for monitor orientation shall be as follows:

(1) When the sound level measurement system is hand-held or is otherwise monitored by a person located near its microphone, the holder shall orient himself relative to the highway in a manner consistent with the recommendation of the manufacturer of the sound level measurement system.

(2) In no case shall the holder or observer be closer than 2 feet (0.6 meters) from the microphone of the system, nor shall he locate himself between the microphone and the vehicle being measured.

(c) *Microphone orientation.* The microphone of the sound level measurement system shall be oriented toward the traveled lane of the highway at the microphone target point at an angle that is consistent with the recommendation of the manufacturer of the system. If the manufacturer of the system does not recommend an angle of orientation for its microphone, the microphone shall be oriented toward the highway at an angle of not less than 70° and not more than perpendicular to the horizontal plane of the traveled lane of the highway at the microphone target point.

(d) *Network and response mode.* The sound level measurement system shall be set to the A-weighting network and ''fast'' meter response mode.

Copyright © 1998 Commonwealth of Pennsylvania

§ 157.44. Measurement procedures.

(a) *Conditions.* In accordance with the provisions of this section, a measurement shall be made of the sound level generated by a motor vehicle operating through the measurement area on the traveled lane of the highway within the test site, regardless of the highway grade, load, acceleration or deceleration.

(b) *Maximum sound level reading.* The second level generated by the motor vehicle shall be the highest reading observed on the sound level measurement system as the vehicle passes through the measurement area, corrected, when appropriate, in accordance with the provisions of Subchapter F (relating to correction factors).

Table 1 lists the range of maximum permissible sound level readings for various readings for various test conditions.

The sound level of the vehicle being measured shall be observed to rise at least six decibels (A) before the maximum sound level occurs and to fall at least six decibels (A) after the maximum sound level occurs in order to be considered a valid sound level reading.

Cross References

This section cited in 67 Pa. Code § 157.51 (relating to microphone distance correction factors).

Subchapter F. CORRECTION FACTORS

Sec.
157.51. Microphone distance correction factors.
157.52. Computation of open site requirements—nonstandard sites.

Cross References

This subchapter cited in 67 Pa. Code § 157.41 (relating to site characteristics); and 67 Pa. Code § 157.44 (relating to measurement procedures).

§ 157.51. Microphone distance correction factors.

If the distance between the microphone location point and the microphone target point is other than 50 feet (15.2 meters), the maximum observed sound level reading generated by the motor vehicle in accordance with § 157.44 (relating to measurement procedures) shall be corrected as specified in the following table:

TABLE 2
Distance Correction Factors

If the distance between the microphone location point and the microphone target point is	Sound level correction factor dB (A)
26-29 feet	-7

If the distance between the microphone location point and the microphone target point is	Sound level correction factor dB (A)
29-32 feet	-6
32-35 feet	-5
35-39 feet	-3
39-43 feet	-2
43-48 feet	-1
48-58 feet	0
58-70 feet	+1
70-83 feet	+2
83-99 feet	+3
99-118 feet	+4

§ 157.52. Computation of open site requirements—nonstandard sites.

(a) *Microphone distance.* If the distance between the microphone location point and the microphone target point is other than 50 feet (15.2 meters), the test site shall be an open site within a radius from both points which is equal to the distance between the microphone location point and the microphone target point.

(b) *Diagrams.* Plan view diagrams of nonstandard test sites are shown in Figures 2 and 3 of Appendix A of this chapter. Figure 2 illustrates a test site which is larger than a standard test site and is based upon a 60 foot (18.3 meters) distance between the microphone location point and the microphone target point. Figure 3 illustrates a test site which is smaller than a standard test site and is based upon a 35 foot (10.7 meters) distance between the microphone location point and the microphone target point.

Copyright © 1998 Commonwealth of Pennsylvania

APPENDIX A

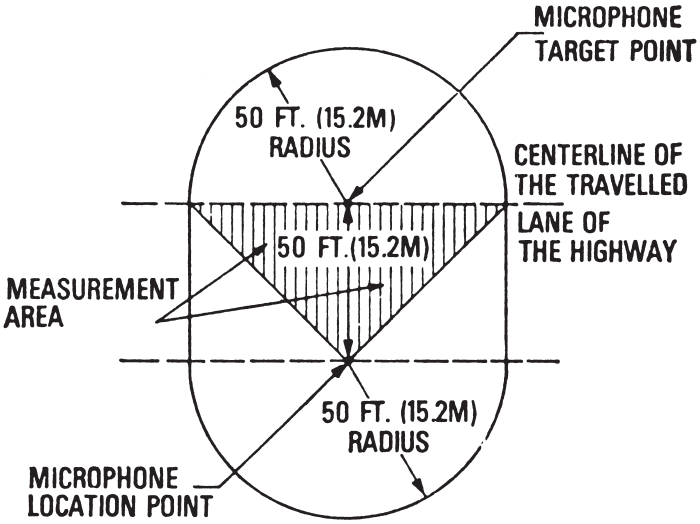

Figure 1
STANDARD TEST SITE;
HIGHWAY OPERATIONS

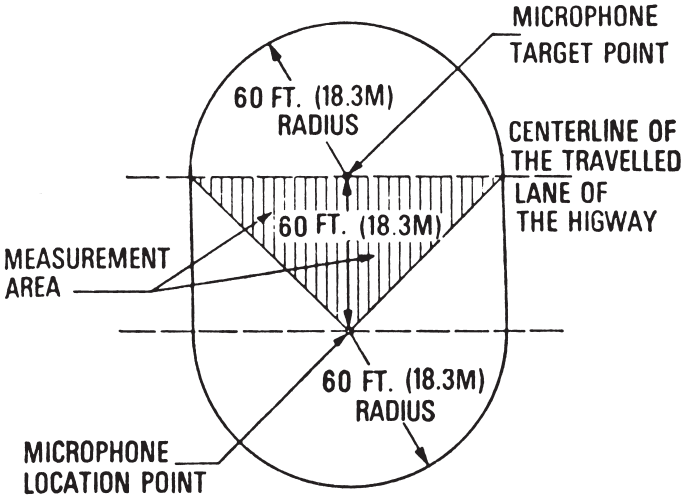

Figure 2
NON-STANDARD TEST SITE;
(60 FT (18.3M) DISTANCE BETWEEN
MICROPHONE LOCATION AND TARGET POINTS)

APPENDIX A (Continued)

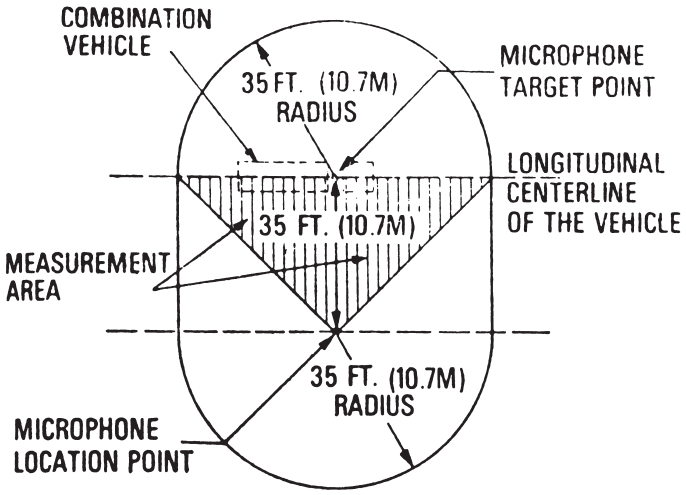

Figure 3
NON-STANDARD TEST SITE;
(35 FT.(10.7M) DISTANCE BETWEEN
MICROPHONE LOCATION AND TARGET POINTS)

[Next page is 159-1.]

Copyright © 1998 Commonwealth of Pennsylvania